Module 06

Introduction to Relational Model/1

Milav Dabgar

www.milav.in

March 17, 2026

Week Recap

- The proliferation of DBMS in wide range of applications provide motivation to study the subject
- Know Your Course provided information about prerequisites, outline and text book
- The specific need for a DBMS discussed in contrast to a file system based application using a programming language like Python
- Basic notions of a DBMS are introduced

Module Objectives

Goals

- To understand attributes and their types

Module Objectives

Goals

- To understand attributes and their types
- To understand the mathematical structure of relational model

Module Objectives

Goals

- To understand attributes and their types
- To understand the mathematical structure of relational model
  - Schema

Module Objectives

Goals

- To understand attributes and their types
- To understand the mathematical structure of relational model
  - Schema
  - Instance

Module Objectives

Goals

- To understand attributes and their types
- To understand the mathematical structure of relational model
  - Schema
  - Instance
  - Keys

Module Objectives

Goals

- To understand attributes and their types
- To understand the mathematical structure of relational model
  - Schema
  - Instance
  - Keys
- To familiarize with different types of relational query languages

Module Outline

- Attribute Types

Module Outline

- Attribute Types
- Relation Schema and Instance

Module Outline

- Attribute Types
- Relation Schema and Instance
- Keys

Module Outline

- Attribute Types
- Relation Schema and Instance
- Keys
- Relational Query Languages

Example of a Relation

Example of a Relation

ID	name	dept_name	salary
10101	Srinivasan	Comp. Sci.	65000
12121	Wu	Finance	90000
15151	Mozart	Music	40000
22222	Einstein	Physics	95000
45565	El Said	History	60000
58583	Gold	Physics	87000
76543	Katz	Comp. Sci.	75000
76766	Califieri	History	62000
83821	Singh	Finance	80000
98345	Crick	Biology	72000
...	...	...	...

Columns are attributes; rows are tuples.

Attributes

Attribute Types

Example Relation

Consider `Students = (Roll#, First Name, Last Name, DoB, Passport#, Aadhaar#, Department)` relation

Attribute Types

Example Relation

Consider `Students = (Roll#, First Name, Last Name, DoB, Passport#, Aadhaar#, Department)` relation

- The set of allowed values for each attribute is called the **domain** of the attribute
  - **Roll#**: Alphanumeric string

Attribute Types

Example Relation

Consider `Students = (Roll#, First Name, Last Name, DoB, Passport#, Aadhaar#, Department)` relation

- The set of allowed values for each attribute is called the **domain** of the attribute
  - **Roll#**: Alphanumeric string
  - **First Name, Last Name**: Alpha String

Attribute Types

Example Relation

Consider `Students = (Roll#, First Name, Last Name, DoB, Passport#, Aadhaar#, Department)` relation

- The set of allowed values for each attribute is called the **domain** of the attribute
  - **Roll#**: Alphanumeric string
  - **First Name, Last Name**: Alpha String
  - **DoB**: Date

Attribute Types

Example Relation

Consider `Students = (Roll#, First Name, Last Name, DoB, Passport#, Aadhaar#, Department)` relation

- The set of allowed values for each attribute is called the **domain** of the attribute
  - **Roll#**: Alphanumeric string
  - **First Name, Last Name**: Alpha String
  - **DoB**: Date
  - **Passport#**: String (Letter followed by 7 digits) - nullable (optional)

Attribute Types

Example Relation

Consider `Students = (Roll#, First Name, Last Name, DoB, Passport#, Aadhaar#, Department)` relation

- The set of allowed values for each attribute is called the **domain** of the attribute
  - **Roll#**: Alphanumeric string
  - **First Name, Last Name**: Alpha String
  - **DoB**: Date
  - **Passport#**: String (Letter followed by 7 digits) - nullable (optional)
  - **Aadhaar#**: 12-digit number

Attribute Types

Example Relation

Consider `Students = (Roll#, First Name, Last Name, DoB, Passport#, Aadhaar#, Department)` relation

- The set of allowed values for each attribute is called the **domain** of the attribute
  - **Roll#**: Alphanumeric string
  - **First Name, Last Name**: Alpha String
  - **DoB**: Date
  - **Passport#**: String (Letter followed by 7 digits) - nullable (optional)
  - **Aadhaar#**: 12-digit number
  - **Department**: Alpha String

Attribute Types

Example Relation

Consider `Students = (Roll#, First Name, Last Name, DoB, Passport#, Aadhaar#, Department)` relation

- The set of allowed values for each attribute is called the **domain** of the attribute
  - **Roll#**: Alphanumeric string
  - **First Name, Last Name**: Alpha String
  - **DoB**: Date
  - **Passport#**: String (Letter followed by 7 digits) - nullable (optional)
  - **Aadhaar#**: 12-digit number
  - **Department**: Alpha String
- Attribute values are (normally) required to be **atomic**; that is, indivisible

Attribute Types

Example Relation

Consider `Students = (Roll#, First Name, Last Name, DoB, Passport#, Aadhaar#, Department)` relation

- The set of allowed values for each attribute is called the **domain** of the attribute
  - **Roll#**: Alphanumeric string
  - **First Name, Last Name**: Alpha String
  - **DoB**: Date
  - **Passport#**: String (Letter followed by 7 digits) - nullable (optional)
  - **Aadhaar#**: 12-digit number
  - **Department**: Alpha String
- Attribute values are (normally) required to be **atomic**; that is, indivisible
- The special value **null** is a member of every domain. Indicates that the value is unknown

Attribute Types

Example Relation

Consider `Students = (Roll#, First Name, Last Name, DoB, Passport#, Aadhaar#, Department)` relation

- The set of allowed values for each attribute is called the **domain** of the attribute
  - **Roll#**: Alphanumeric string
  - **First Name, Last Name**: Alpha String
  - **DoB**: Date
  - **Passport#**: String (Letter followed by 7 digits) - nullable (optional)
  - **Aadhaar#**: 12-digit number
  - **Department**: Alpha String
- Attribute values are (normally) required to be **atomic**; that is, indivisible
- The special value **null** is a member of every domain. Indicates that the value is unknown
- The null value may cause complications in the definition of many operations

Attribute Types (2)

Roll #	**First Name**	**Last Name**	**DoB**	**Passport #**	**Aadhaar #**	**Department**
15CS10026	Lalit	Dubey	27-Mar-1997	L4032464	1728-6174-9239	Computer
16EE30029	Jatin	Chopra	17-Nov-1996	*null*	3917-1836-3816	Electrical

Schema and Instance

Relation Schema and Instance

Formal Definition

- $A_1, A_2, \ldots, A_n$ are attributes

Relation Schema and Instance

Formal Definition

- $A_1, A_2, \ldots, A_n$ are attributes
- $R = (A_1, A_2, \ldots, A_n)$ is a **relation schema**. Example: `instructor = (ID, name, dept_name, salary)`

Relation Schema and Instance

Formal Definition

- $A_1, A_2, \ldots, A_n$ are attributes
- $R = (A_1, A_2, \ldots, A_n)$ is a **relation schema**. Example: `instructor = (ID, name, dept_name, salary)`
- Formally, given sets $D_1, D_2, \ldots, D_n$ a **relation** r is a subset of $D_1 \times D_2 \times \cdots \times D_n$.

Relation Schema and Instance

Formal Definition

- $A_1, A_2, \ldots, A_n$ are attributes
- $R = (A_1, A_2, \ldots, A_n)$ is a **relation schema**. Example: `instructor = (ID, name, dept_name, salary)`
- Formally, given sets $D_1, D_2, \ldots, D_n$ a **relation** r is a subset of $D_1 \times D_2 \times \cdots \times D_n$.

- Thus, a relation is a set of n-tuples $(a_1, a_2, \ldots, a_n)$ where each $a_i \in D_i$

Relation Schema and Instance

Formal Definition

- $A_1, A_2, \ldots, A_n$ are attributes
- $R = (A_1, A_2, \ldots, A_n)$ is a **relation schema**. Example: `instructor = (ID, name, dept_name, salary)`
- Formally, given sets $D_1, D_2, \ldots, D_n$ a **relation** r is a subset of $D_1 \times D_2 \times \cdots \times D_n$.

- Thus, a relation is a set of n-tuples $(a_1, a_2, \ldots, a_n)$ where each $a_i \in D_i$
- The current values (**relation instance**) of a relation are specified by a table

Relation Schema and Instance

Formal Definition

- $A_1, A_2, \ldots, A_n$ are attributes
- $R = (A_1, A_2, \ldots, A_n)$ is a **relation schema**. Example: `instructor = (ID, name, dept_name, salary)`
- Formally, given sets $D_1, D_2, \ldots, D_n$ a **relation** r is a subset of $D_1 \times D_2 \times \cdots \times D_n$.

- Thus, a relation is a set of n-tuples $(a_1, a_2, \ldots, a_n)$ where each $a_i \in D_i$
- The current values (**relation instance**) of a relation are specified by a table
- An element t of r is a **tuple**, represented by a row in a table

Relation Schema and Instance

Formal Definition

- $A_1, A_2, \ldots, A_n$ are attributes
- $R = (A_1, A_2, \ldots, A_n)$ is a **relation schema**. Example: `instructor = (ID, name, dept_name, salary)`
- Formally, given sets $D_1, D_2, \ldots, D_n$ a **relation** r is a subset of $D_1 \times D_2 \times \cdots \times D_n$.

- Thus, a relation is a set of n-tuples $(a_1, a_2, \ldots, a_n)$ where each $a_i \in D_i$
- The current values (**relation instance**) of a relation are specified by a table
- An element t of r is a **tuple**, represented by a row in a table
- Example: instructor $\subseteq$ (String(5) $\times$ String $\times$ String $\times$ Number$^+$), where `ID` $\in$ String(5), `name` $\in$ String, `dept_name` $\in$ String, and `salary` $\in$ Number$^+$

Relations are Unordered with Unique Tuples

- Order of tuples / rows is irrelevant (tuples may be stored in an arbitrary order)
- No two tuples / rows may be identical
- Example: `instructor` relation with unordered tuples

ID	**name**	**dept_name**	**salary**
22222	Einstein	Physics	95000
12121	Wu	Finance	90000
32343	El Said	History	60000
45565	Katz	Sci. Comp.	75000
98345	Kim	Elec.	80000
76766	Crick	Biology	72000
10101	Srinivasan	Sci. Comp.	65000
58583	Califieri	History	62000
83821	Brandt	Sci. Comp.	92000
15151	Mozart	Music	40000
33456	Gold	Physics	87000

Keys

Keys

Definitions

- Let $K \subseteq R$, where R is the set of attributes in the relation

Keys

Definitions

- Let $K \subseteq R$, where R is the set of attributes in the relation
- K is a **superkey** of R if values for K are sufficient to identify a unique tuple of each possible relation $r(R)$

Keys

Definitions

- Let $K \subseteq R$, where R is the set of attributes in the relation
- K is a **superkey** of R if values for K are sufficient to identify a unique tuple of each possible relation $r(R)$
  - Example: {`ID`} and {`ID, name`} are both superkeys of `instructor`

Keys

Definitions

- Let $K \subseteq R$, where R is the set of attributes in the relation
- K is a **superkey** of R if values for K are sufficient to identify a unique tuple of each possible relation $r(R)$
  - Example: {`ID`} and {`ID, name`} are both superkeys of `instructor`
- Superkey K is a **candidate key** if K is minimal

Keys

Definitions

- Let $K \subseteq R$, where R is the set of attributes in the relation
- K is a **superkey** of R if values for K are sufficient to identify a unique tuple of each possible relation $r(R)$
  - Example: {`ID`} and {`ID, name`} are both superkeys of `instructor`
- Superkey K is a **candidate key** if K is minimal
  - Example: {`ID`} is a candidate key for `instructor`

Keys

Definitions

- Let $K \subseteq R$, where R is the set of attributes in the relation
- K is a **superkey** of R if values for K are sufficient to identify a unique tuple of each possible relation $r(R)$
  - Example: {`ID`} and {`ID, name`} are both superkeys of `instructor`
- Superkey K is a **candidate key** if K is minimal
  - Example: {`ID`} is a candidate key for `instructor`

- One of the candidate keys is selected to be the **primary key**. Which one?

Keys

Definitions

- Let $K \subseteq R$, where R is the set of attributes in the relation
- K is a **superkey** of R if values for K are sufficient to identify a unique tuple of each possible relation $r(R)$
  - Example: {`ID`} and {`ID, name`} are both superkeys of `instructor`
- Superkey K is a **candidate key** if K is minimal
  - Example: {`ID`} is a candidate key for `instructor`

- One of the candidate keys is selected to be the **primary key**. Which one?
- A **surrogate key** (or synthetic key) in a database is a unique identifier for either an entity in the modeled world or an object in the database

Keys

Definitions

- Let $K \subseteq R$, where R is the set of attributes in the relation
- K is a **superkey** of R if values for K are sufficient to identify a unique tuple of each possible relation $r(R)$
  - Example: {`ID`} and {`ID, name`} are both superkeys of `instructor`
- Superkey K is a **candidate key** if K is minimal
  - Example: {`ID`} is a candidate key for `instructor`

- One of the candidate keys is selected to be the **primary key**. Which one?
- A **surrogate key** (or synthetic key) in a database is a unique identifier for either an entity in the modeled world or an object in the database
- The surrogate key is not derived from application data, unlike a **natural** (or business) **key** which is derived from application data.

Keys (2)

- `Students = (Roll#, First Name, Last Name, DoB, Passport#, Aadhaar#, Department)`
- **Super Key**: Roll#, {Roll#, DoB}
- **Candidate Keys**: Roll#, {First Name, Last Name}, Aadhaar#
- Passport# cannot be a key. Why?
  - Null values are allowed for Passport# (a student may not have a passport)
- **Primary Key**: Roll#
- Can Aadhaar# be a key?
  - It may suffice for unique identification. But Roll# may have additional useful information. For example: **14CS92P01**
    - 14: Admission in 2014
    - CS: Department = CS
    - 92: Category of Student
    - P: Type of admission: Project
    - 01: Serial Number

Keys (3)

- **Secondary / Alternate Key**: {First Name, Last Name}, Aadhaar#
- **Simple Key**: Consists of a single attribute
- **Composite Key**: {First Name, Last Name}
  - Consists of more than one attribute to uniquely identify an entity occurrence
  - One or more of the attributes, which make up the key, are not simple keys in their own right

Roll #	**First Name**	**Last Name**	**DoB**	**Passport #**	**Aadhaar #**	**Department**
15CS10026	Lalit	Dubey	27-Mar-1997	L4032464	1728-6174-9239	Computer
16EE30029	Jatin	Chopra	17-Nov-1996	*null*	3917-1836-3816	Electrical
15EC10016	Smriti	Mongra	23-Dec-1996	G5432849	2045-9271-0914	Electronics
16CE10038	Dipti	Dutta	02-Feb-1997	*null*	5719-1948-2918	Civil
15CS30021	Ramdin	Minz	10-Jan-1997	X8811623	4928-4927-5924	Computer

Keys (4)

- **Foreign key constraint**: Value in one relation must appear in another
  - **Referencing relation**
    - Enrolment: Foreign Keys - Roll#, Course#
  - **Referenced relation**
    - Students, Courses
- A **compound key** consists of more than one attribute to uniquely identify an entity occurrence
  - Each attribute, which makes up the key, is a simple key in its own right
  - Example: {Roll#, Course#}

Schema Diagram for University Database

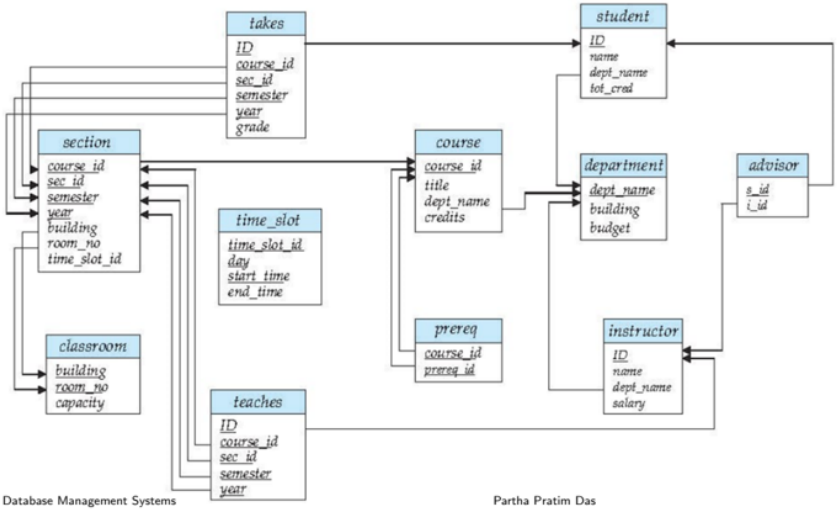

Relational Query Languages

Relational Query Languages

Procedural viz-a-viz Non-procedural or Declarative Paradigms

- **Procedural programming** requires that the programmer tell the computer *what* to do

Relational Query Languages

Procedural viz-a-viz Non-procedural or Declarative Paradigms

- **Procedural programming** requires that the programmer tell the computer *what* to do
  - That is, *how* to get the output for the range of required inputs

Relational Query Languages

Procedural viz-a-viz Non-procedural or Declarative Paradigms

- **Procedural programming** requires that the programmer tell the computer *what* to do
  - That is, *how* to get the output for the range of required inputs
  - The programmer must know an appropriate algorithm

Relational Query Languages

Procedural viz-a-viz Non-procedural or Declarative Paradigms

- **Procedural programming** requires that the programmer tell the computer *what* to do
  - That is, *how* to get the output for the range of required inputs
  - The programmer must know an appropriate algorithm
- **Declarative programming** requires a more descriptive style

Relational Query Languages

Procedural viz-a-viz Non-procedural or Declarative Paradigms

- **Procedural programming** requires that the programmer tell the computer *what* to do
  - That is, *how* to get the output for the range of required inputs
  - The programmer must know an appropriate algorithm
- **Declarative programming** requires a more descriptive style
  - The programmer must know what relationships hold between various entities

Relational Query Languages (Cont..)

Procedural vs. Non-procedural or Declarative Paradigms

- Example: Square root of n
- **Procedural**
  a) Guess x_0 (close to root of n)
  b) $i \leftarrow 0$
  c) $x_{i+1} \leftarrow (x_i + n/x_i)/2$
  d) Repeat Step 2 if $|x_{i+1} - x_i| >$ delta
- **Declarative**
  - ▷ Root of n is m such that $m^2 = n$

Relational Query Languages (2)

- 'Pure' languages:
  - Relational algebra
  - Tuple relational calculus
  - Domain relational calculus
- The above 3 pure languages are equivalent in computing power
- We will concentrate on **relational algebra**
  - Not Turing-machine equivalent
    - Not all algorithms can be expressed in RA
  - Consists of 6 basic operations

Module Summary

- Introduced the notion of attributes and their types
- Taken an overview of the mathematical structure of relational model – schema and instance
- Introduced the notion of keys – primary as well as foreign

Slides used in this presentation are borrowed from `http://db-book.com/` *with kind permission of the authors.*
Edited and new slides are marked with 'PPD'.